SERPAC Electronic Enclosures RB53X06Y10Y △2

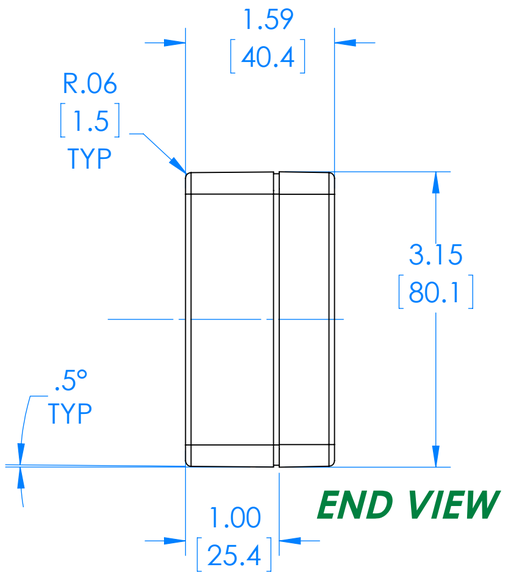

END VIEW

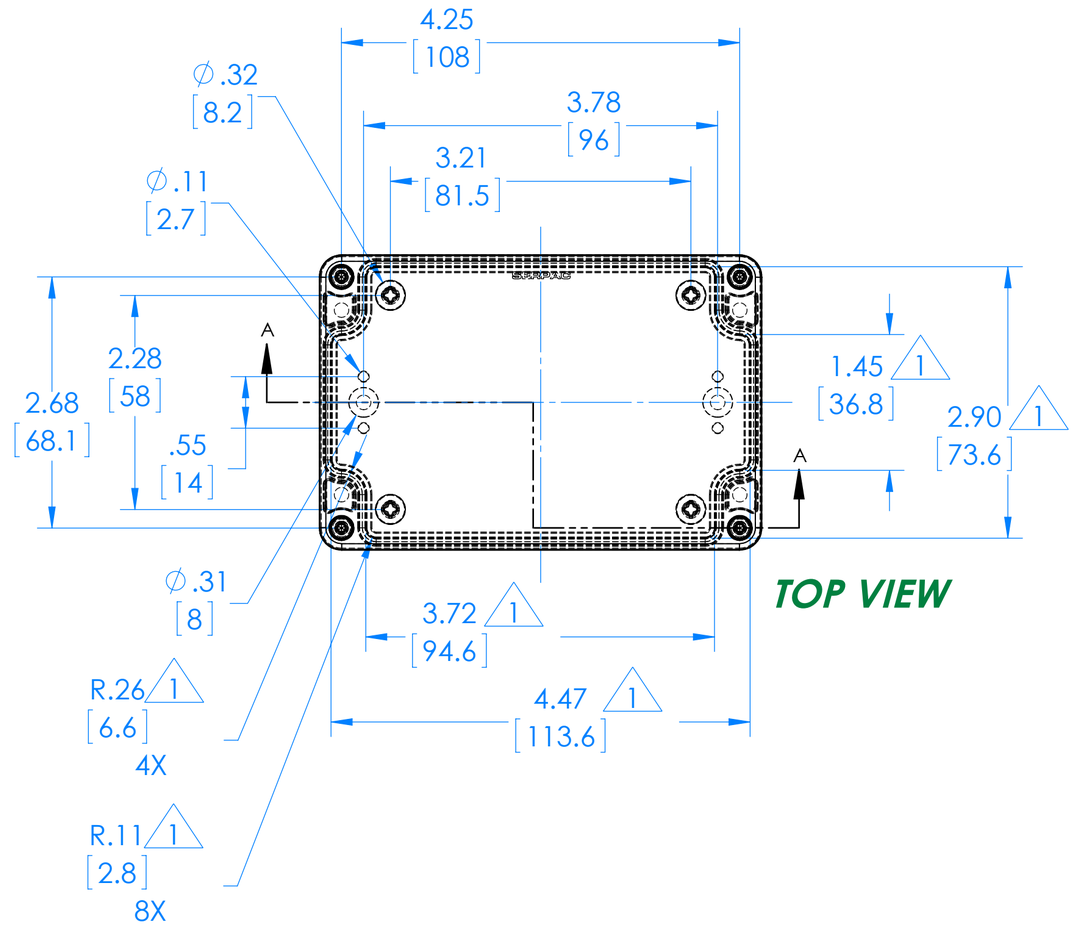

TOP VIEW

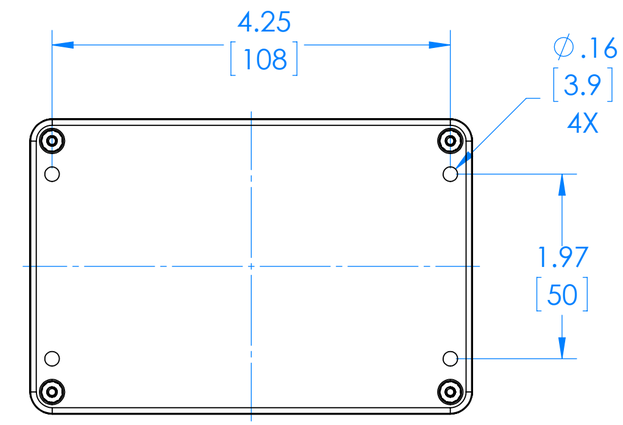

BOTTOM VIEW

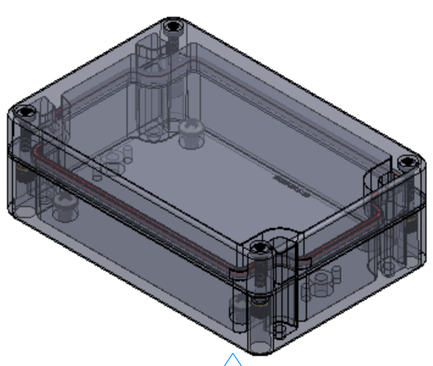

RB53X06C10C △2
(Part shown, no material (X) specified)

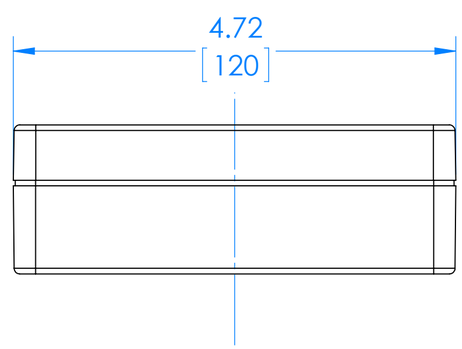

SIDE VIEW

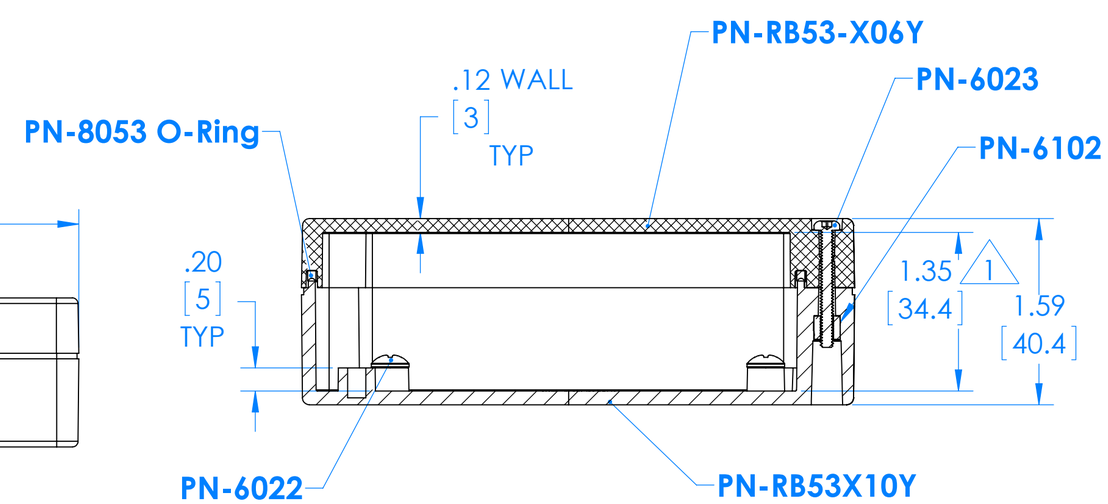

SECTION A-A
SCALE 1 : 1.5

PN	Description
RB53-X06Y	(1) RB53 06, Top
RB53X10Y	(1) RB53 10, Bottom
8053	(1) RB53 O-Ring
6023	(4) #4-40 Torx 10 Hd Screw
6022	(4) #10 High/Low Pan Hd x 1/4"
6102	(4) #4-40 Threaded Insert

△1 =INTERIOR DIMENSIONS (@ BOTTOM)

△2 =STANDARD COLORS (Y) ARE: BLACK (B), CLEAR (C) AND GRAY (G)
TOPS AND BOTTOMS ALL POSIBLE COMBINATIONS AVAILABLE
STANDARD MATERIALS (X) ARE: POLYCARBONATE (P) AND ABS (A)

-Watertight enclosure meets or exceed Nema 4 and or IP67.

DIMENSIONS in Inch
[mm]

ALL DIMENSIONS ARE ± .010" 7/20/2015

2009 Wright Ave., La Verne,Ca. 91750
Ph. (626) 331-0517 Fx. (626) 331-8584 serpac.com